KOHLER. Faucets

Tone™

Single-handle bar sink faucet

K-23767

Features

- High-arch swing spout with 155˚ rotation offers superior clearance for filling pitchers, chilling bottles and cleanup.
- Single lever handle makes adjusting water temperature easy.
- Temperature memory allows faucet to be turned on and off at the temperature set during prior usage.
- KOHLER ceramic disc valves exceed industry longevity standards for a lifetime of durable performance.
- 1.5 gpm (5.7 lpm) maximum flow rate at 60 psi (4.14 bar).

Material

- Premium metal construction for durability and reliability.
- KOHLER finishes resist corrosion and tarnishing.

Installation

- Single-hole installation (3-hole escutcheon sold separately).
- Flexible supply lines simplify installation.

Adapters, Rough-in and Extension Kits

1327990	Range: 2-1/2" (64 mm) - 4-5/8" (117 mm)

Recommended Products/Accessories

K-77685 Single-Cartridge Water Filtration System
K-77686 Double-Cartridge Water Filtration System
K-77687 single replacement filter cartridge
K-77688 Replacement Filter Cartridges, Two-Pack

Optional Products/Accessories

K-24461 Three-hole kitchen faucet escutcheon

ADA | **CSA B651**

Codes/Standards

ASME A112.18.1/CSA B125.1
NSF/ANSI 61
NSF/ANSI 372
All applicable US Federal and State material regulations
DOE - Energy Policy Act 1992
California Energy Commission (CEC)
ADA
ICC/ANSI A117.1
CSA B651

KOHLER® Faucet Lifetime Limited Warranty

See website for detailed warranty information.

Available Colors/Finishes

Color tiles intended for reference only.

Color	Code	Description
	CP	Polished Chrome
	VS	Vibrant® Stainless
	BL	Matte Black
	2MB	Vibrant® Brushed Moderne Brass
	BMB	Matte Black with Moderne Brass
	CBL	Matte Black with Polished Chrome

KOHLER Faucets

Tone™

Single-handle bar sink faucet

K-23767

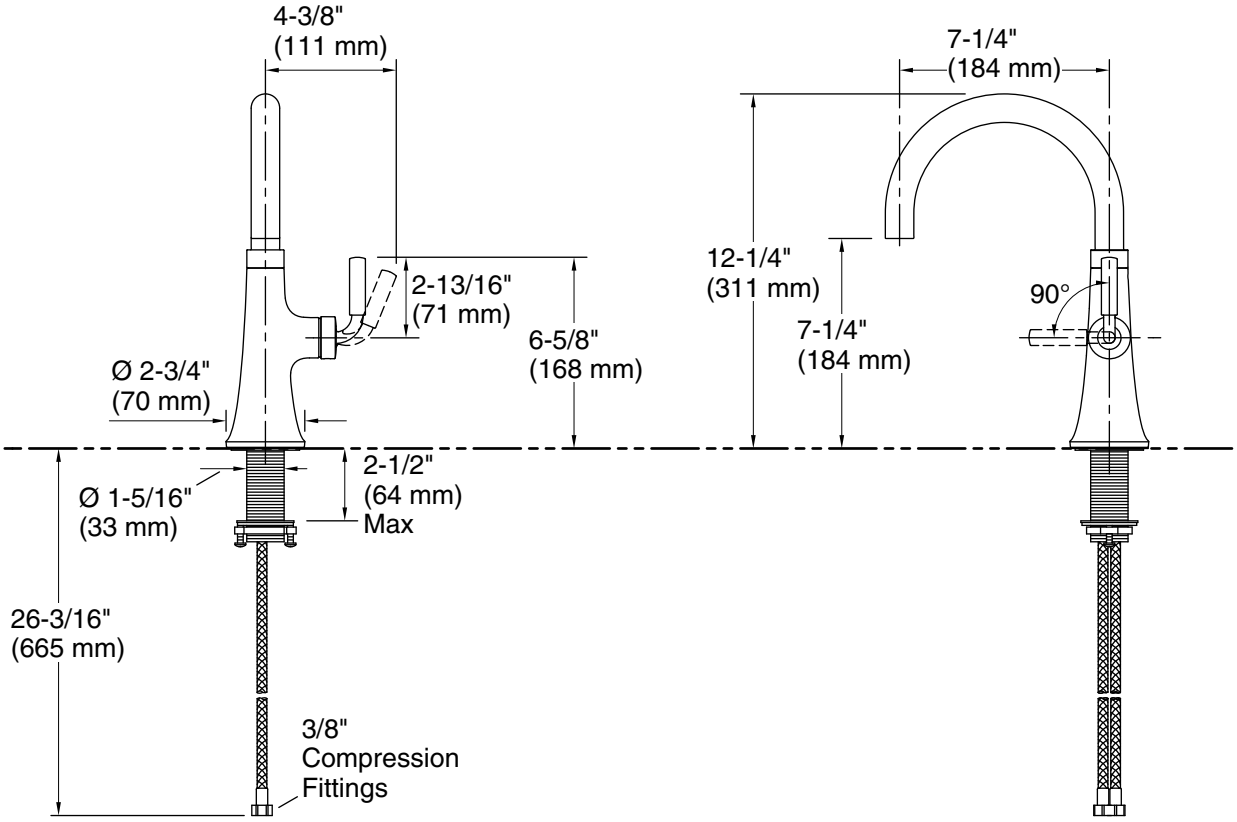

Technical Information

All product dimensions are nominal.

Notes

Install this product according to the installation instructions.

ADA, CSA B651 compliant when installed to the specific requirements of these regulations.